UV-FN-xxx-LN series

LD PUMPED ALL-SOLID-STATE LOW NOISE LASER



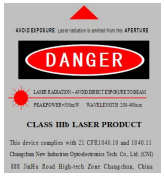

Low noise all solid state laser is made features of high output power stability, good beam profile, ultra compact, long lifetime, and easy operating, which is widely used in collimation, laser medical treatment, scientific experiment, optical instrument, etc.

SPECIFICATIONS

Wavelength (nm)	320±1	335±1	349±1	355±1	360±1
Operating mode	CW				
Output power (mW)[1]	1-30	1-10	1-50	1-10	1-100
Power stability (rms, 4 hours±3°C)	<2%, <1%	<2%, <1%	<2%, <1%	<5%, <3%, (<2% optional)	<2%, <1%, <0.5%
Spectral line width (nm)	<0.1, <0.003				
Transverse mode	TEM_{00}				
Noise of amplitude (rms, 20Hz-20MHz)	<1%				
M^2	<1.5		<1.2		
Beam diameter at the aperture ($1/e^2$, mm)	<1.0			<1.2	<1.0
Beam divergence, full angle (mrad)	<1.2			<1.5	<1.2
Polarization ratio	>100:1, Horizontal (Vertical optional)			>50:1(>100:1 optional) Vertical (Horizontal optional)	>100:1, Horizontal (Vertical optional)
Warm-up time (minutes)	<10				
Pointing Stability(μrad) (over 2 hours after warm-up and ±3°C)	<50				
Pointing Stability Over Temperature(μrad/°C)	<8				
Beam height from base plate (mm)	30				
Cooled method	Air Cooled/ Water Cooled				
Operating Temperature (°C)	10-35				
Power supply (100-240VAC)	PSU-H-FDA				
Expected lifetime (hours)	>10000				

LASER HEAD (UV-FN-320/335/349/360-LN)[2]	LASER HEAD (UV-FN-355-LN)[2]
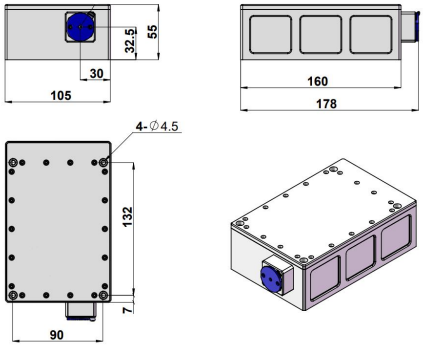	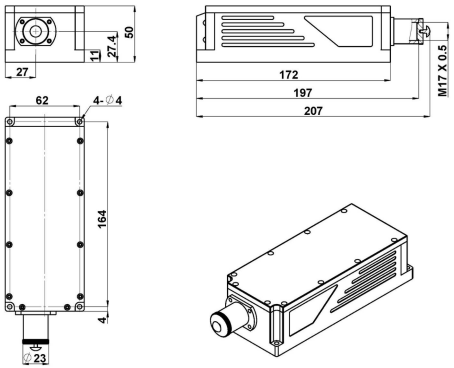
178(L)×105(W)×55(H) mm³, 2.5kg	**197(L)×70(W)×50(H) mm³, 1.5kg**
POWER SUPPLY[3]	HEATSINK (TC-02-FS-L) optional
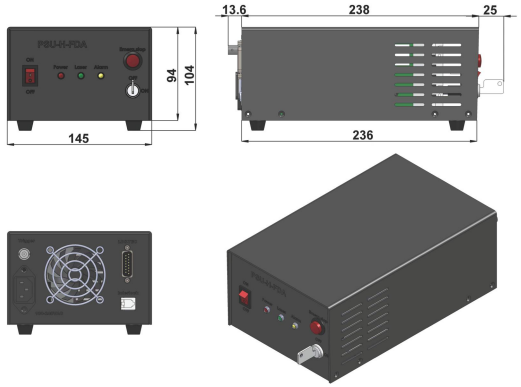	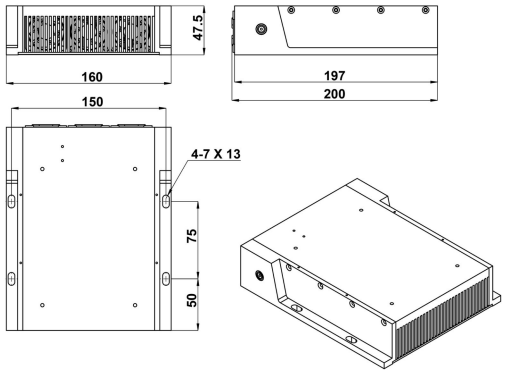
276.6(L) ×145(W) ×103.6(H) mm³, 2.3 kg	**200(L)×160(W)×47.5(H) mm³, 2.0 kg**

1 Any power level can be selected in this range.

2 The laser head needs to be used on a heat sink with good heat dissipation.

3 Fixed output power.